Bourdon-tube-pressure-gauge, glycerine filled
st. steel case, diam. 63, 100, 160 mm
Type 010.1 vertical entry - Type 010.2 back entry

Case:	Stainless steel AISI 304 with blow up relief - Surface mounting flange
Bezel:	Rolled in (diam. 63, 100) Bayonet (diam. 160) Stainless steel AISI 304 - Panel mounting flange - Narrow panel ring with clamp
Protection class:	IP 65 per EN 60529 / IEC 529
Filling:	Glycerine 98% - Silicon oil (down to -45°C)
Dial:	Aluminium, white varnished lettering and graduation black - Red mark - 2nd scale in psi, inwards red
Pointer:	Aluminium, black
Window:	Plastic
Movement:	CU-alloy, wear parts brass
Pressure element:	Phosphorus-bronze respectively stainless steel >= 600 bar (diam. 63) 60 bar (diam. 100, 160)
Connection:	Brass, male thread vertical and back entry (EN 837-1/7.3) G ¼, SW 14 (diam 63) G ½, SW 22 (diam. 100, 160) - NPT ¼ (diam. 63) NPT ½ (diam. 100, 160)
Measuring range: (EN 837-1/5)	0/0,6 bar … 0/400 bar (diam. 63) 0/0,6 bar … 0/1000 bar (diam. 100, 160) -1,0 bar -0 bar … -1,0 bar /+15 bar
Accuracy: (EN 837-1/6)	Class 1,6 (diam. 63) Class 1,0 (diam. 100, 160) - Class 1,6 (diam. 100 type 043.1)
Working pressure:	Steady: up to 60 bar 1,3 x full scale value up to 100 bar 1,25 x full scale value more than 100 bar 1,15 x full scale value
Operating temp.:	Ambient: TMIN -20°C, TMAX +60°C Medium: TMAX +60°C - System hard soldered for TMAX +150°C / +200°C - OPTIONS

Bourdon-tube-pressure-gauge, glycerine filled
st. steel case, diam. 63, 100, 160 mm
Type 010.1 vertical entry - Type 010.2 back entry

Dimensions
standard version

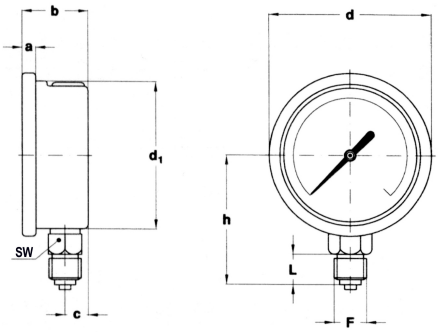

diam. 63 vertical entry - type 010.1

a	b	c	d	d1	h	L	F	SW	weight [kg]
5,6	28	10	68	62,6	54,3	13	G¼	14	0,2

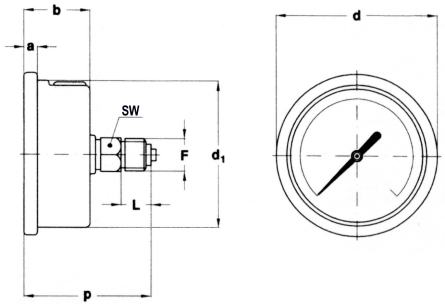

diam. 63 back entry - type 010.2

a	b	d	d1	p	L	F	SW	weight [kg]
5,6	28	68	62,6	53,8	13	G¼	14	0,21

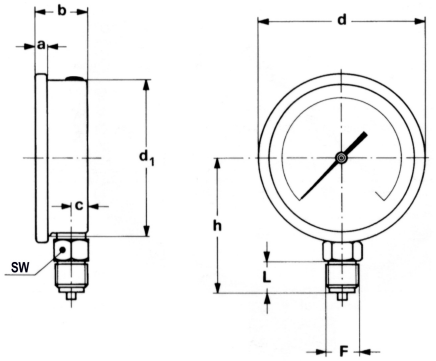

diam. 100 vertical entry - type 010.1

a	b	c	d	d1	h	L	F	SW	weight [kg]
12	37	10,5	100	98,5	83	19	G½	22	0,58

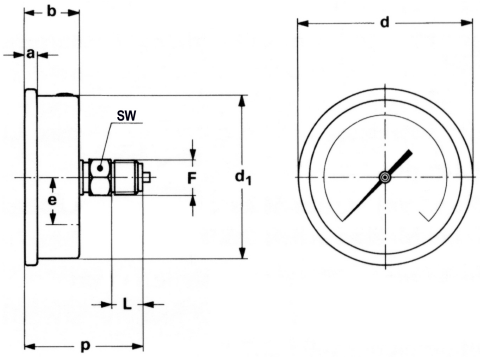

diam. 100 back entry - type 010.2

a	b	d	d1	p	L	F	SW	weight [kg]
12	37	100	98,5	66	19	G½	22	0,59

type		010.1.	010.2.	010.3.	010.4.	043.1.	010.1.	010.2.	010.1.
diam.		63				100	100		160
version		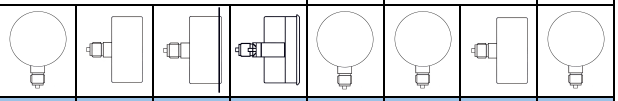							
-1-0	bar	9830	9851	x	x	9772	9871	9893	9909
-1+0,6		x	x	x	x	x	x	x	x
-1+1,5		9831	x	x	x	x	9872	x	
-1+3		9832	x	x	x	9773	9873	x	
-1+5		9833	9852	x	x	x	9874	x	
-1+9		9834	9853	x	x	x	x	x	
-1+15		x	9854	x	x	x	x	x	
0-0,6		x	x	x	x	x	x	x	x
0-1		9835	9855	x	x	9774	9876	9894	9910
0-1,6		9836	9856	x	x	9775	9877	9895	9911
0-2,5		9837	9857	x	x	9776	9878	9896	9912
0-4		9838	9858	x	x	9777	9879	9897	9913
0-6	bar	9839	9859	x	x	9778	9880	9898	9914
0-10		9840	9860	x	x	9779	9881	9899	9915
0-16		9841	9861	x	x	9780	9882	9900	9916
0-25		9842	9862	x	x	9781	9883	9901	9917
0-40		9843	9863	x	x	9782	9884	9902	9918
0-60	bar	9844	9864	x	x	9783	9885	9903	9919
0-100		9845	9865	x	x	9784	9886	9904	9920
0-160		9846	9866	x	x	9785	9887	9905	9921
0-250		9847	9867	x	x	9786	9888	9906	9922
0-315		x	x	x	x	x	x	x	x
0-400		9848	9868	x	x	9787	9889	9907	9923
0-600	bar	-	-	-	-	x	9890	9908	9924
0-1000		-	-	-	-	x	9891	x	9995

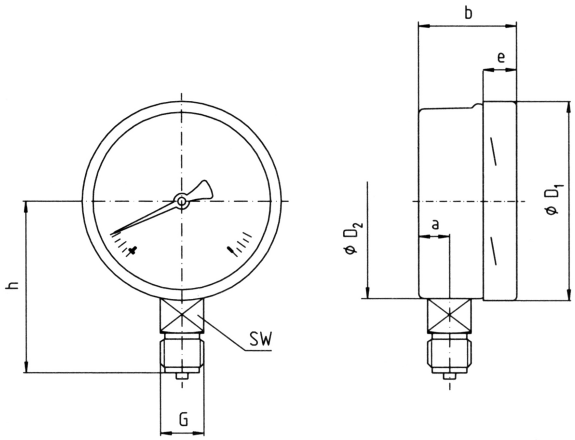

diam. 160 vertical entry - type 010.1

a	b	e	h	D1	D2	G	SW	weight [kg]
15	51	15	118	160	158	G½	22	2,0

Dimensions and technical data are conform to current company standard.
Changes to improve our instruments will be made without preannouncement.