Bourdon-tube-pressure-gauge
process industry series, safety version
type 232.30 diam. 63, 100, 160 mm

Case:	Bayonet, stainless steel AISI 304, with solid baffle wall and blow-out back - Surface mounting lugs - Contacts (diam. 100, 160)
Bezel:	Bayonet, stainless steel AISI 304 - Panel mounting flange
Protection class:	IP 54 per EN 60529 / IEC 529
Dial:	Aluminium, white varnished lettering and graduation black - Red mark - Red mark pointer (diam. 100, 160)
Pointer:	Aluminium, black
Window:	Laminated safety glass - Red mark pointer (diam. 100, 160) - Max. drag pointer (diam. 100, 160)
Movement:	Stainless steel
Pressure element:	Stainless steel AISI 316 L
Connection:	Stainless steel AISI 316 L, male thread vertical or lower back entry (EN 837-1/7.3) G ¼, SW 14 (diam 63) G ½, SW 22 (diam. 100, 160) - NPT ¼ (diam. 63) NPT ½ (diam. 100, 160)
Measuring range: (EN 837-1/5)	0/1,0 bar … 0/1000 bar (diam. 63) 0/0,6 bar … 0/1600 bar (diam. 100, 160) -1,0 bar -0 bar … -1,0 bar /+24 bar
Accuracy: (EN 837-1/6)	Class 1,6 (diam. 63) Class 1,0 (diam. 100, 160) Class 2,5 (diam. 63 0-600 / 0-1000 bar)
Working pressure:	Steady: full scale value Fluctuating: 0,9 x full scale value Short time: 1,3 x full scale value
Operating temp.:	Ambient: TMIN -40°C, TMAX +60°C Medium: TMAX +200°C
	- OPTIONS

Bourdon-tube-pressure-gauge
process industry series, safety version
type 232.30 diam. 63, 100, 160 mm

Dimensions standard version

connection vertical entry

connection lower back entry

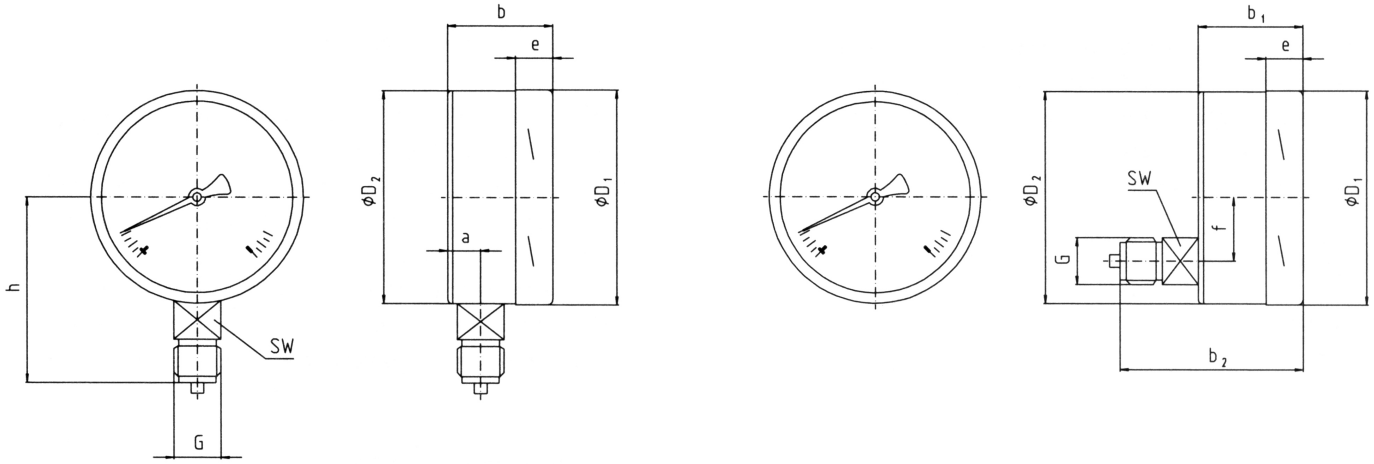

diam.	dimensions [mm]											weight [kg]
	a	b	b1	b2	D1	D2	e	f	G	h ± 1	SW	
63	18	41	41	63	64	63	16	16	¼ B	53	14	0,2
100	33	60	60	93	101	100	17,5	30	½ B	87	22	0,6
160	33	60	60	93	160	159	17,5	50	½ B	118	22	1,1

Connection acc. to EN 837-1/7.3

type		232.30				
diam.		63		100		160
version						
-1-0	bar	9600	x	9700	x	x
-1+0,6	bar	x	x	9701	x	x
-1+1,5	bar	x	x	9702	x	x
-1+3	bar	9644	x	9703	x	x
-1+5	bar	x	x	9704	x	x
-1+9	bar	x	x	9705	x	x
-1+15	bar	9599	x	9706	x	x
-1+24	bar	x	x	x	x	x
0-0,6	bar	-	-	9722	x	x
0-1	bar	9645	x	9707	x	9727
0-1,6	bar	9601	9611	9708	x	9728
0-2,5	bar	9602	9612	9709	x	9729
0-4	bar	9603	9613	9710	x	9730
0-6	bar	9604	9614	9711	x	9731
0-10	bar	9605	9615	9712	x	9732
0-16	bar	9606	9616	9713	x	9733
0-25	bar	9607	9617	9714	x	9734
0-40	bar	9608	9618	9715	x	9735
0-60	bar	9609	9619	9716	x	9736
0-100	bar	9610	x	9717	x	9737
0-160	bar	9597	x	9718	x	9738
0-250	bar	9598	x	9719	x	x
0-400	bar	x	x	9720	x	x
0-600	bar	9646 1)	x 1)	9721	x	x
0-1000	bar	x 1)	x 1)	x	x	x
0-1600	bar	-	-	x	x	x

1) only class 2,5

Dimensions and technical data are conform to current company standard.
Changes to improve our instruments will be made without preannouncement.